SERIAL EEPROM

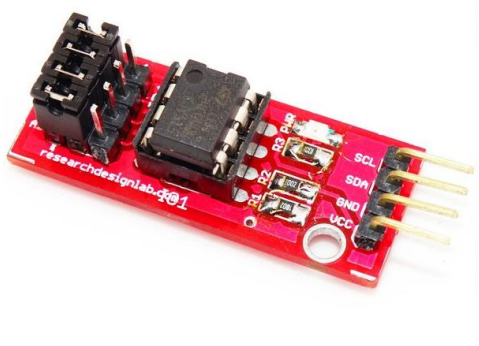

Contents

OVERVIEW

INTRODUCTION

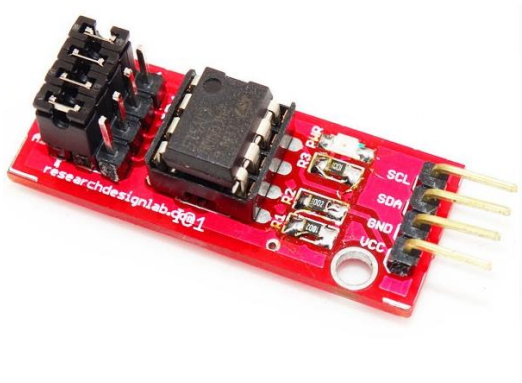

The AT24CXX EEPROM Board is a storage tool for EEPROM with I2C interface, It is a non-volatile memory module.

FEATURES

- Highly reliable.
- High performance CMOS technology serial 4K EEPROM in DIP packaging.
- It offers significant advantages in low-power and low-voltage applications.
- The 24C04 EEPROM uses the I²C addressing protocol.
- Wide operating voltage 3.0 - 5.5v.
- Outputs are provided through 5 pin Connector.
- High quality PCB FR4 Grade with FPT Certified.

BLOCK DIAGRAM

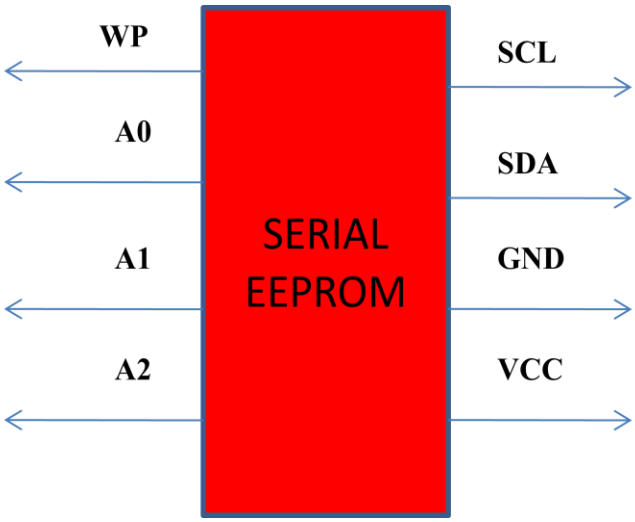

CIRCUIT DIAGRAM

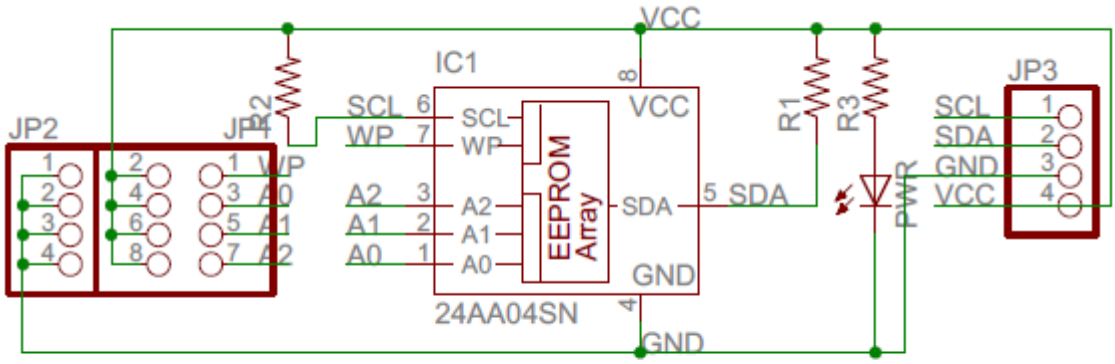

CODE

```
/*
* Project name:
Serial EEPROM Board
* Copyright
(c) Researchdesignlab.com
* Test configuration:
MCU: PIC16F877A
Dev.Board: PIC
Oscillator: 20.0 MHz
Software: mikroC PRO for PIC v 4.6
*/

char ii;                                    // loop variable

void main(){

  PORTB = 0;
  PORTC = 0;
  PORTD = 0;

  TRISB = 0;
  TRISC = 0;
  TRISD = 0;

  for(ii = 0; ii < 32; ii++)                // Fill data buffer
    EEPROM_Write(0x80+ii, ii);              // Write data to address 0x80+ii
```

```
  EEPROM_Write(0x02,0xAA);                // Write some data at address 2
  EEPROM_Write(0x50,0x55);                // Write some data at address 0150

  Delay_ms(1000);                         // Blink PORTB and PORTC LEDs
  PORTB = 0xFF;                           // to indicate reading start
  PORTC = 0xFF;
  Delay_ms(1000);
  PORTB = 0x00;
  PORTC = 0x00;
  Delay_ms(1000);

  PORTB = EEPROM_Read(0x02);              // Read data from address 2 and display it on
PORTB
  PORTC = EEPROM_Read(0x50);              // Read data from address 0x50 and display it
on PORTC

  Delay_ms(1000);

  for(ii = 0; ii < 32; ii++) {            // Read 32 bytes block from address 0x80
    PORTD = EEPROM_Read(0x80+ii);         // and display data on PORTD
    Delay_ms(250);
    }
}
```

REF the following link for ATMEL code

http://researchdesignlab.com/eeprom-atmel-code

RELATED PRODUCTS

PIC PROJECT BOARD

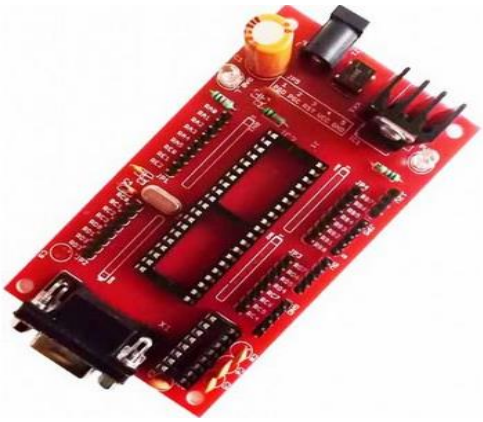

ATMEL PROJECT BOARD