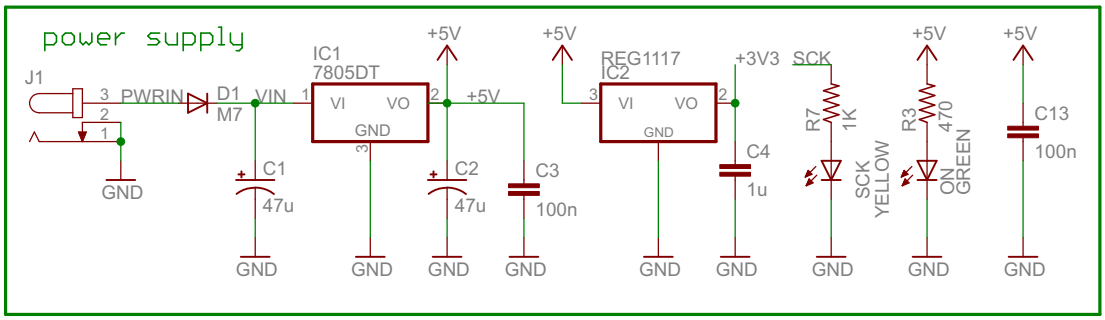

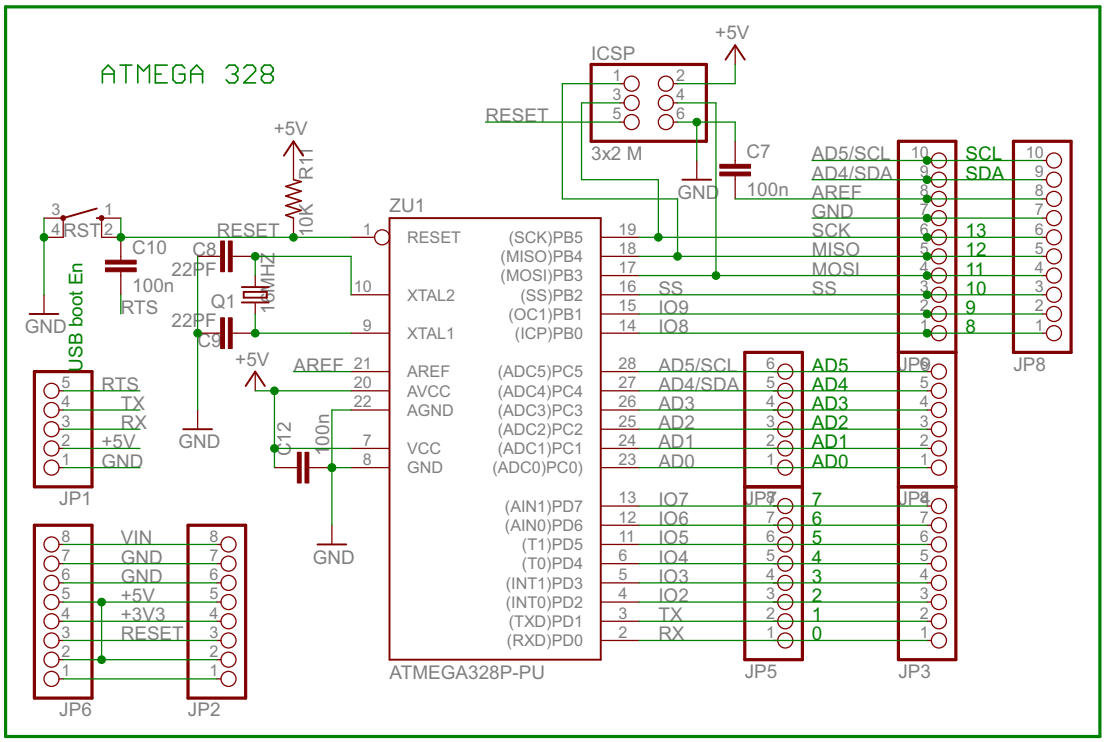

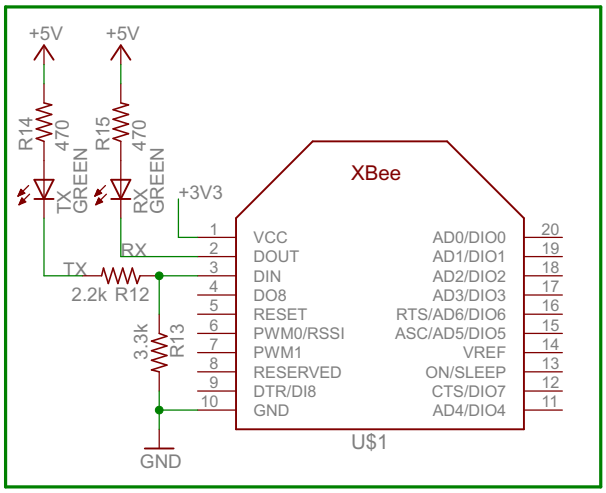

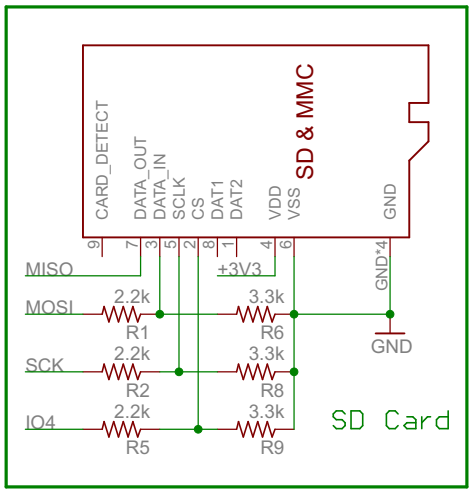

researchdesignlab.com

TITLE: RDL- UNO ATMEGA328 Development Board	
Document Number:	REV: 2.0
Date: 22/07/2014 12:45:09 AM	Sheet: 1/1